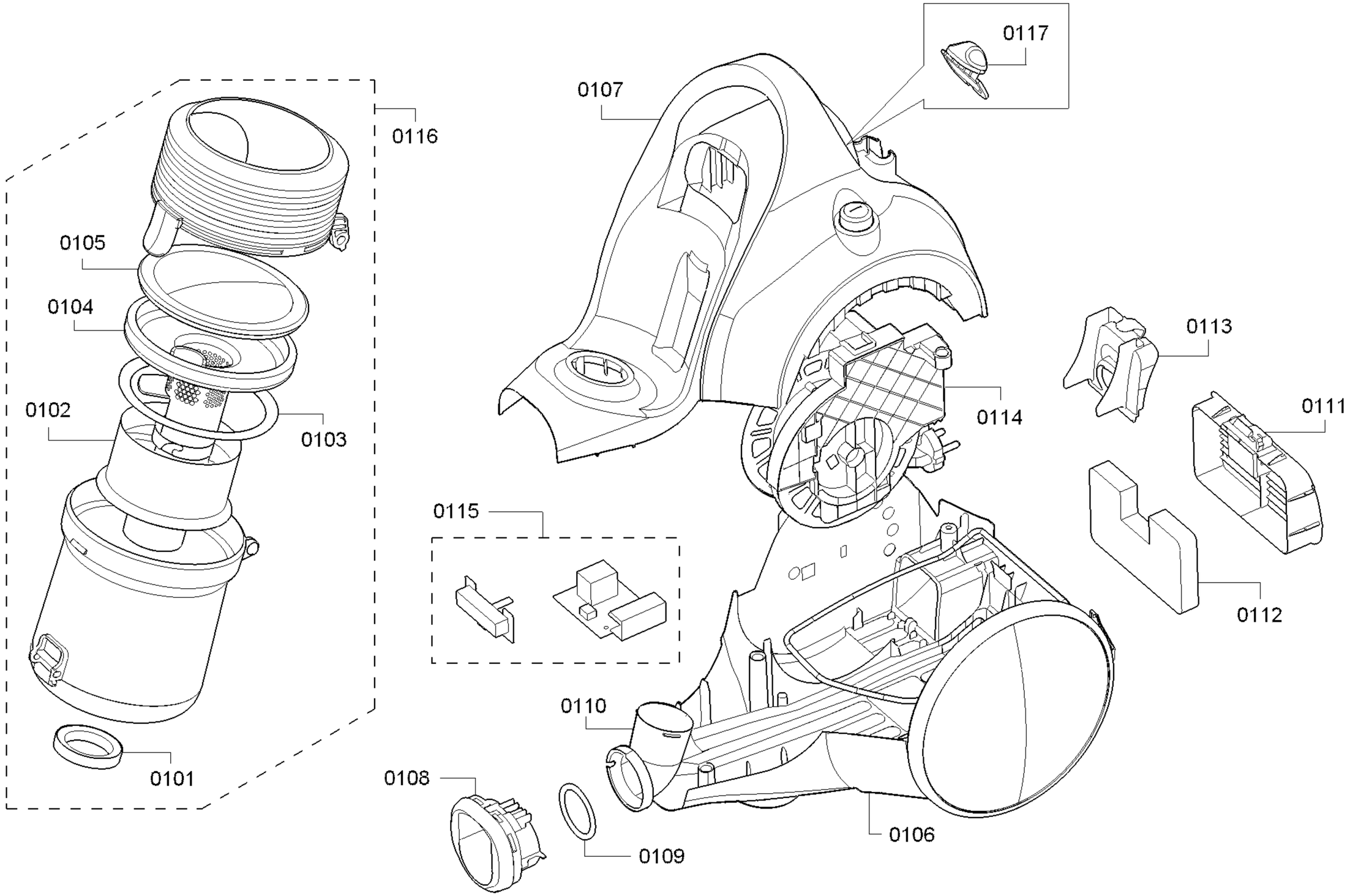




Copyright © ( 2018 ) by Ufesa / B&BTRENDSSL

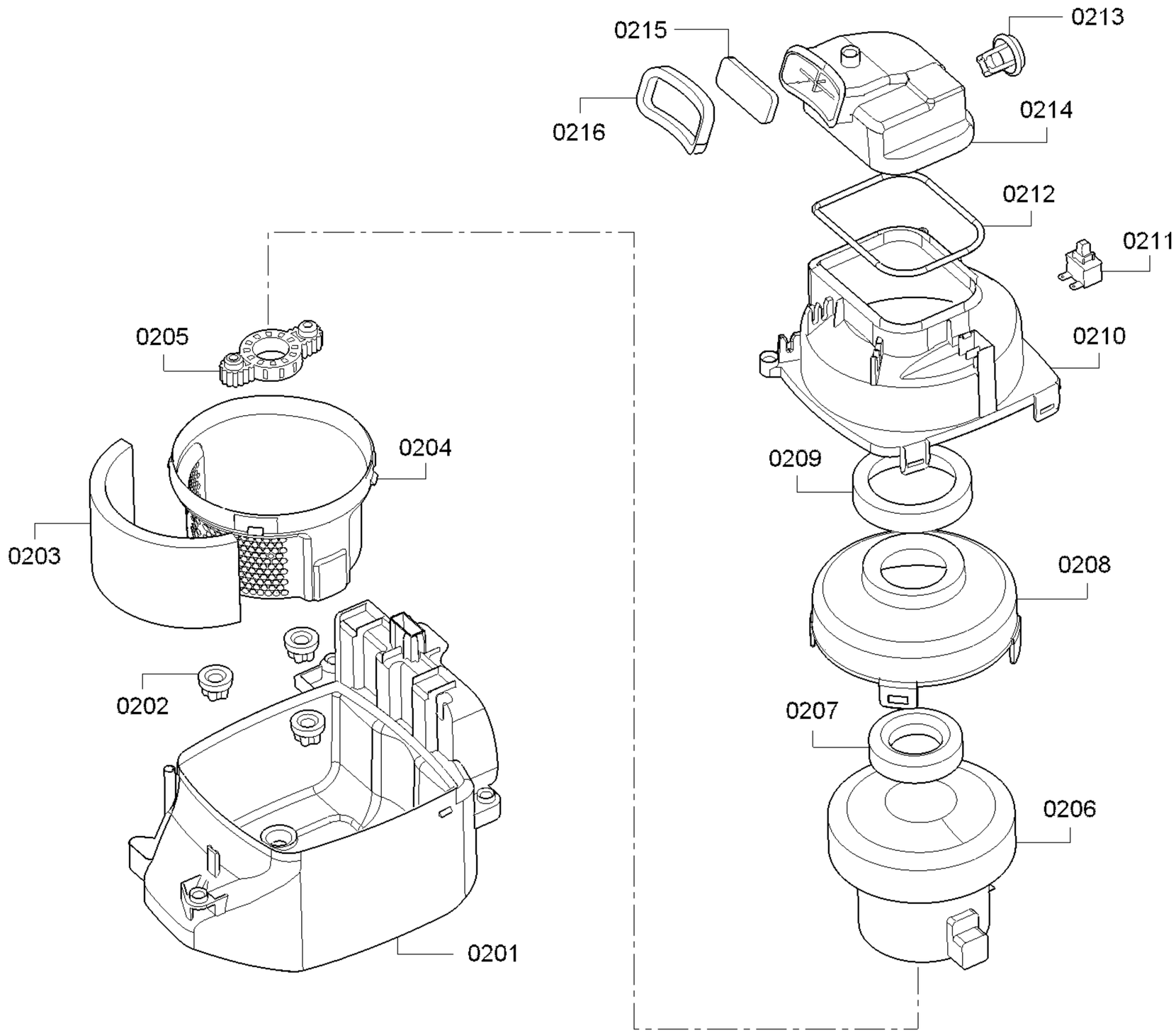


58300000191269 aet 000 b 2/3

Copyright © ( 2018 ) by Ufesa / B&BTRENDSSL

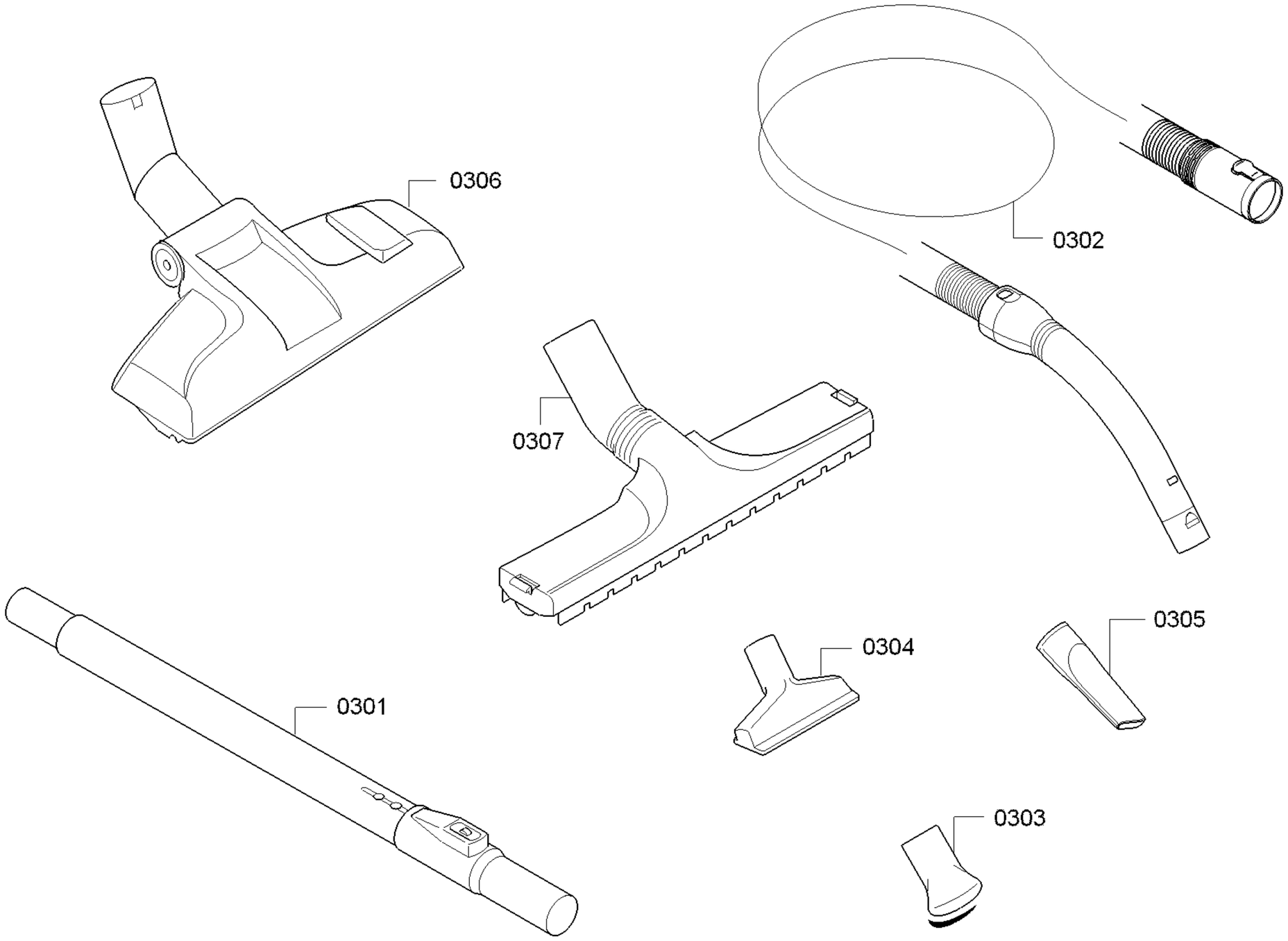




Copyright © ( 2018 ) by Ufesa / B&BTRENDSSL